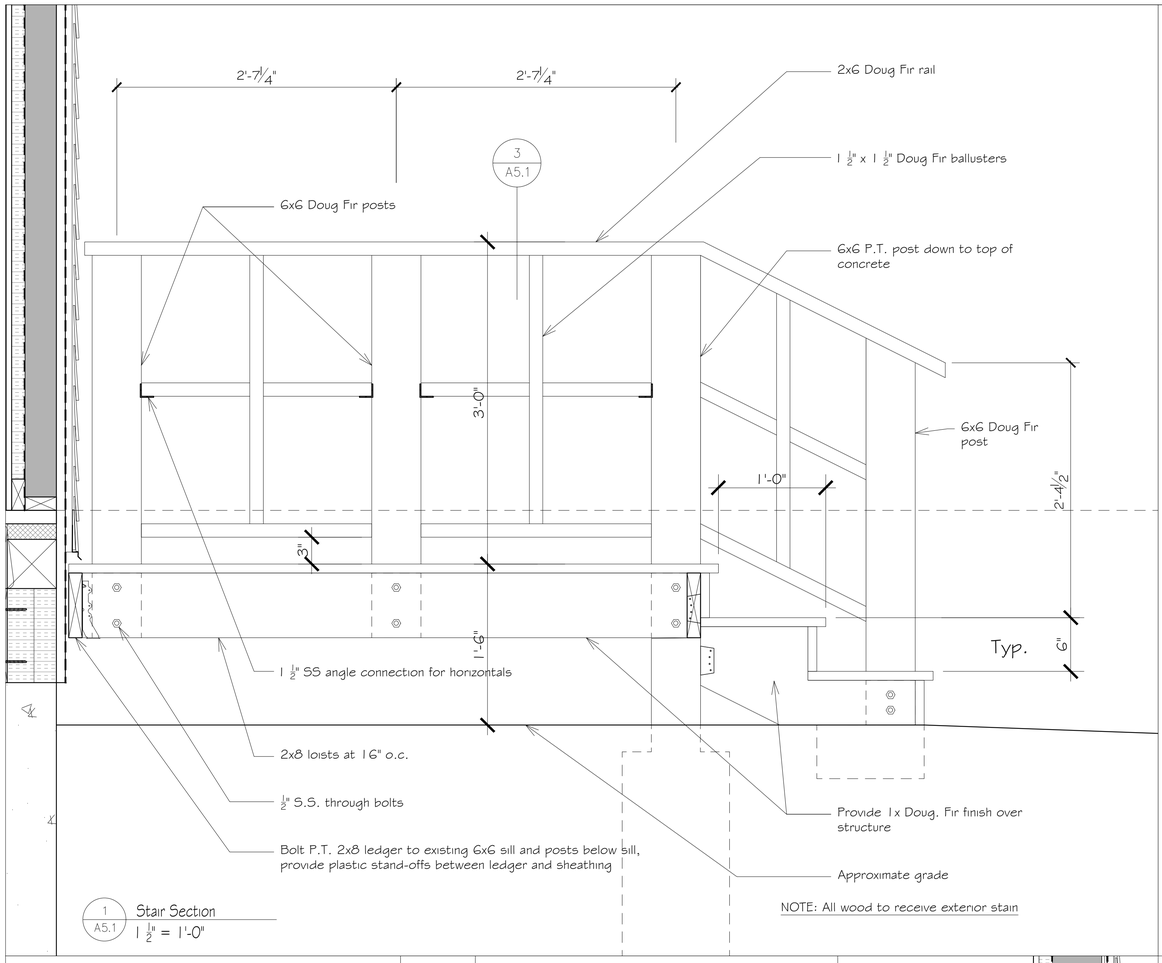

NOTE: All wood to receive exterior stain

1 A5.1 Stair Section
1 ½" = 1'-0"

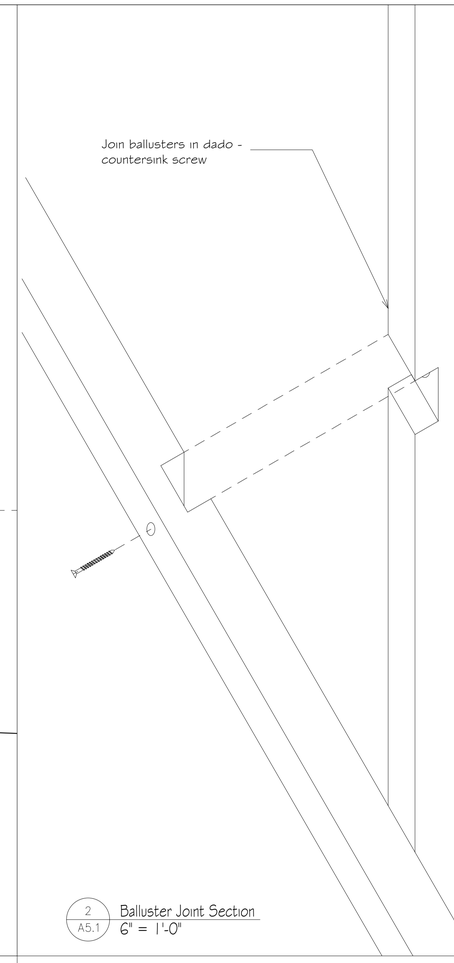

2 A5.1 Balluster Joint Section
6" = 1'-0"

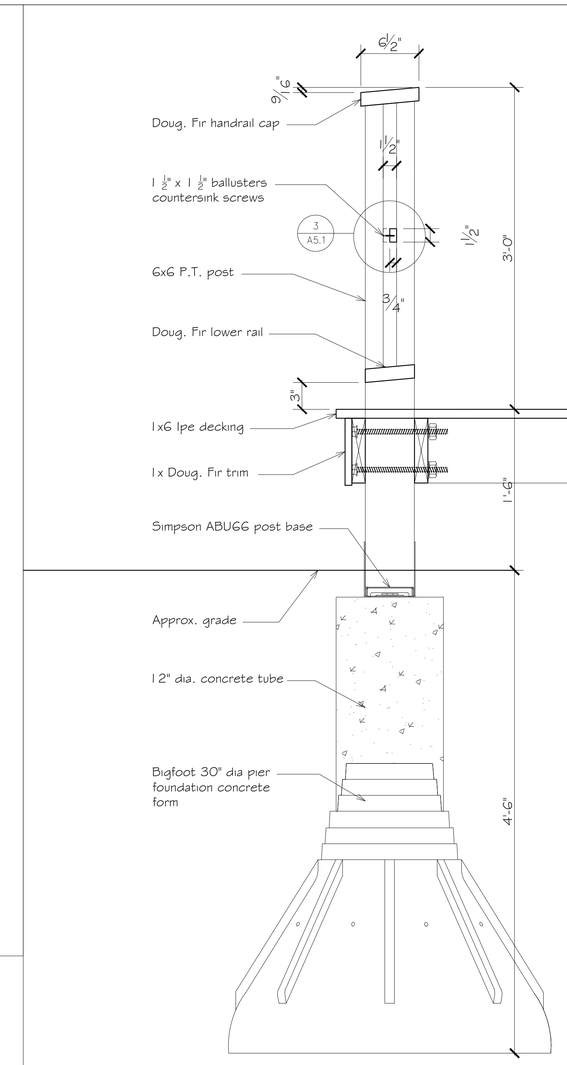

3 A5.1 Rail Section
1 ½" = 1'-0"

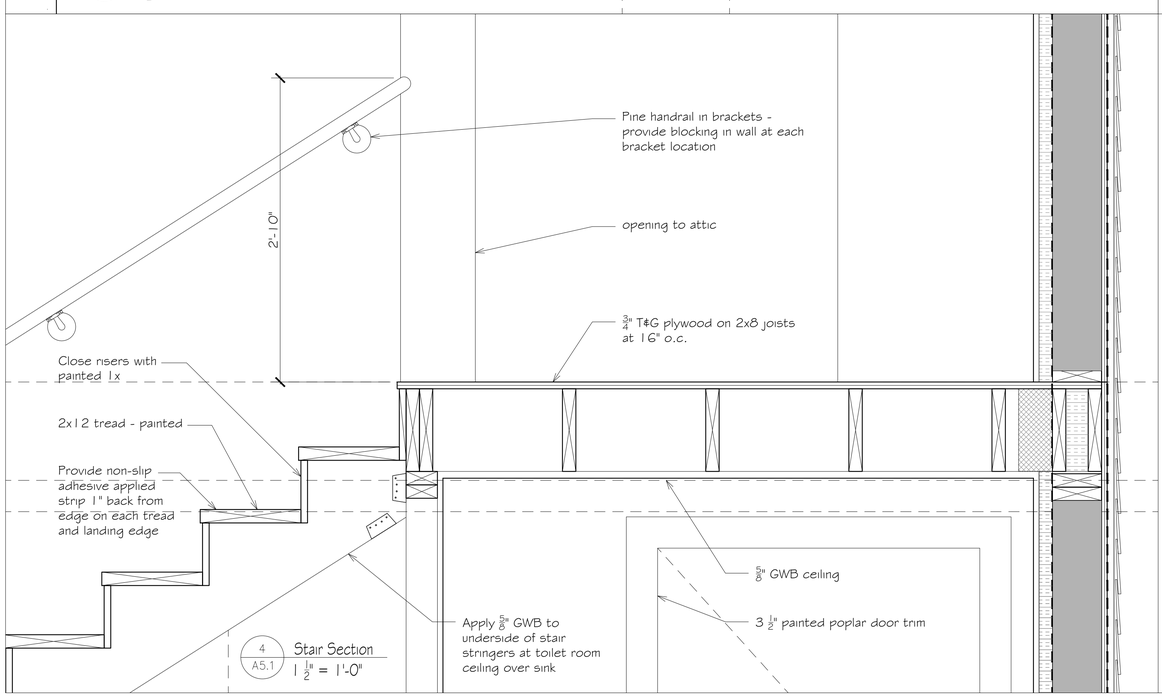

4 A5.1 Stair Section
1 ½" = 1'-0"

Island
Heritage Trust
420 Sunset Road
Deer Isle,
Maine

Stahnke + Kitagawa Architects
20 Bakeman Road
Harborside, ME
207 326 8877

Stair Details

SCALE:
AS NOTED

12-2-23

DRAWN BY | CHECKED BY

PROJECT NUMBER

DRAWING NUMBER

A5.1